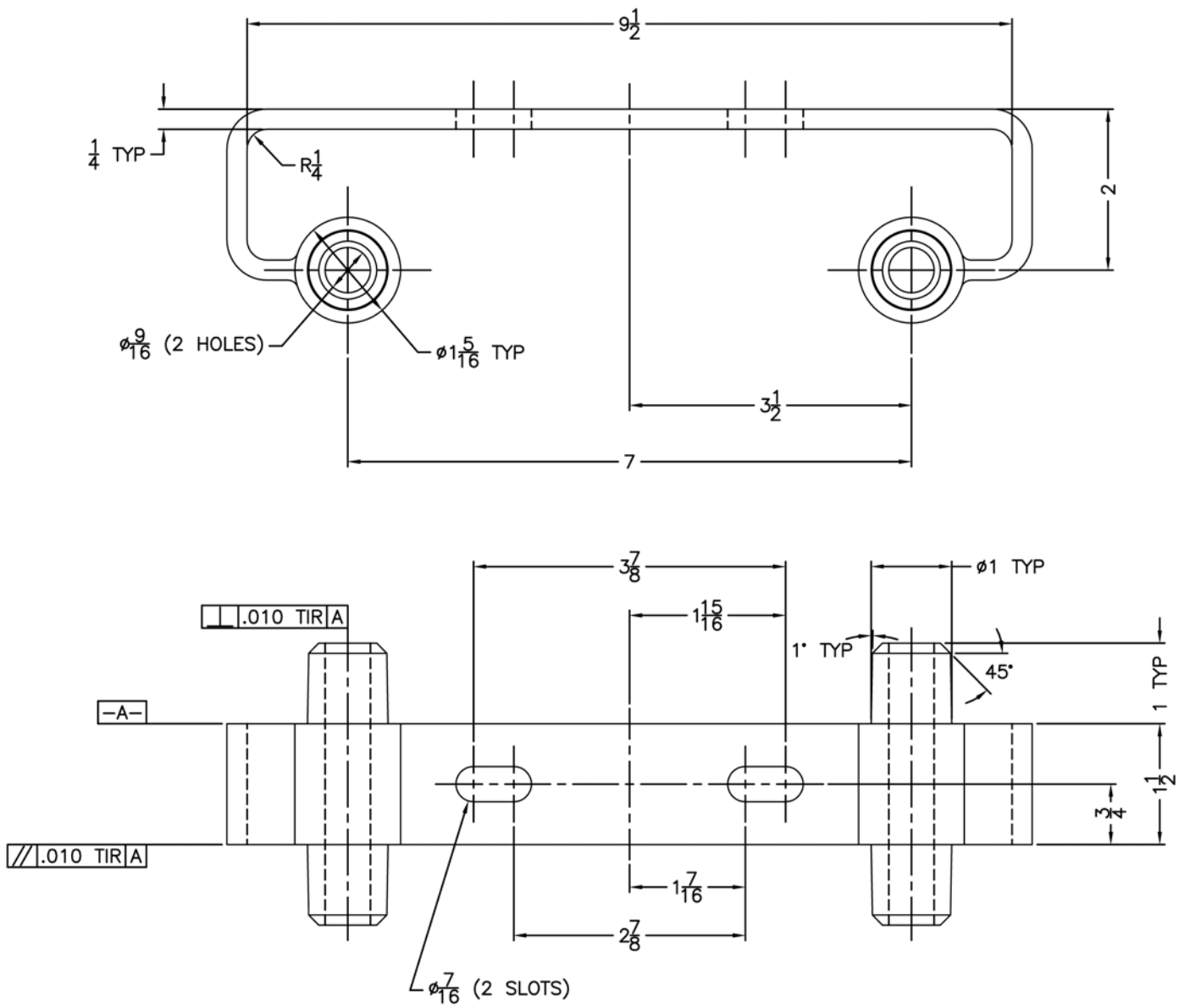

NOTE: SURFACE OF PART MUST BE FREE OF POROSITY.
PART MUST BE FREE OF DISTORTION DUE TO CASTING PROCESS.

INFORMATION CONTAINED IN THIS DRAWING USED WITH PERMISSION BY ORIGINAL AUTHORS.

CHANGES	TOLERANCES	DRAWN BY	DATE	INTERMEDIATE GUIDE BRACKET 1" RAILS
F	DECIMALS .XXX = ±.005 .XX = ±.010 FRACTIONAL X/X = ±.1/64 ANGLES X° = ±1/2°	D. MIDDLETON	08/25/04	
E		MATERIAL SPECIFICATION: 304 SERIES STAINLESS STEEL		SCALE: FULL / PART NO. SR-IGB-1
D				
C				
B				
A				